Tests proposed to investigate the origin of the rebounds in the C_6D_6 signals

V. Babiano, L. Caballero, D. Calvo, C. Domingo-Pardo, D. Esperante, I. Ladarescu, J.L. Taín (IFIC)

The n_TOF Collaboration

European Research Council

nTOF

CSIC
Consejo Superior de Investigaciones Científicas

Outline:

- Nature & impact of the signal ringing and rebounds
- First obvious things to check
- Impedance matching on a distributed transient-signal system
- Impedance measurements
- Examples with a similar PMT+VD
- Proposed tests for the n_TOF set-up during LS2

Nature of the rebounds and their impact in the capture data:

Digitized C6D6 signals:

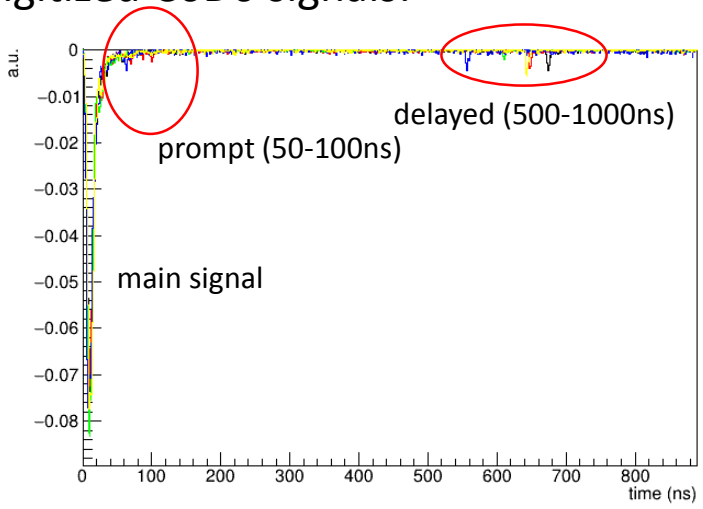

Rebounds time-distribution:

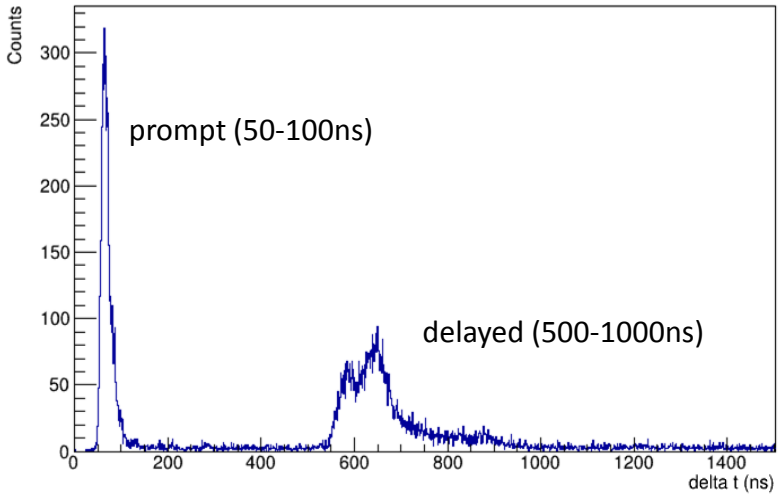

Rebounds amplitude-distribution:

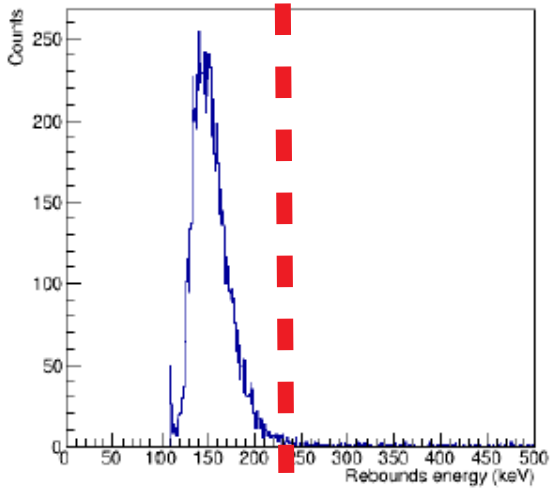

Capture Neutron Spectra:

thr=250keV

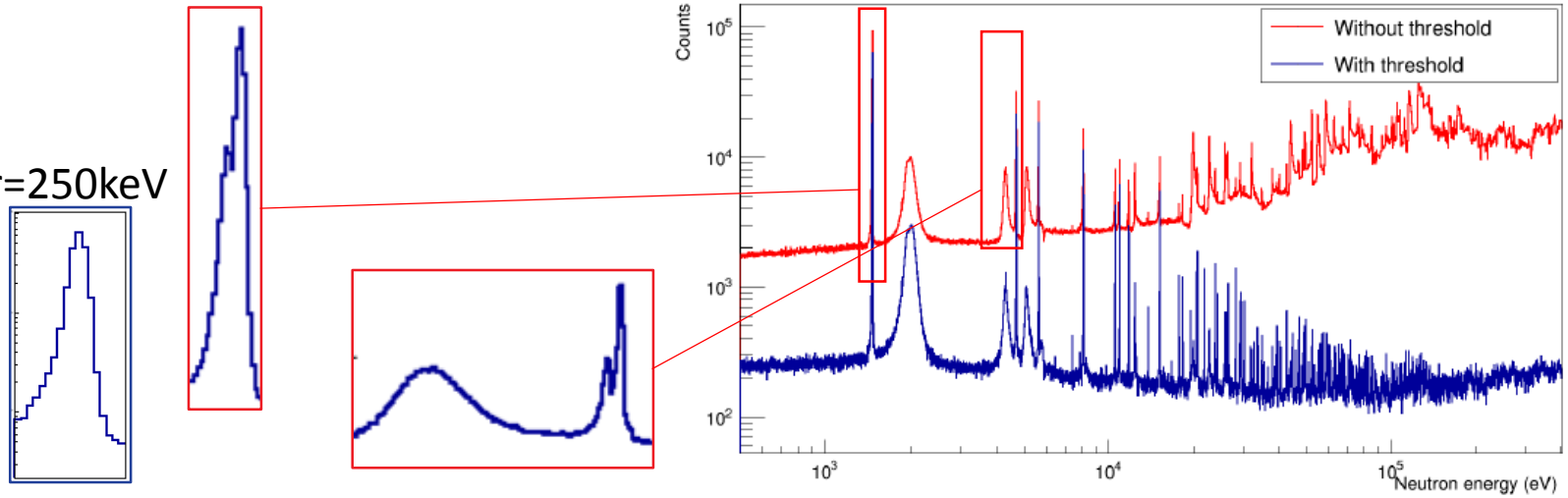

See Adrià Casanovas and Victor Babiano's talks from Granada's n_TOF Collaboration Meeting, 2018

First (obvious) basic tests of the problem: oscilloscope measurements here and there…

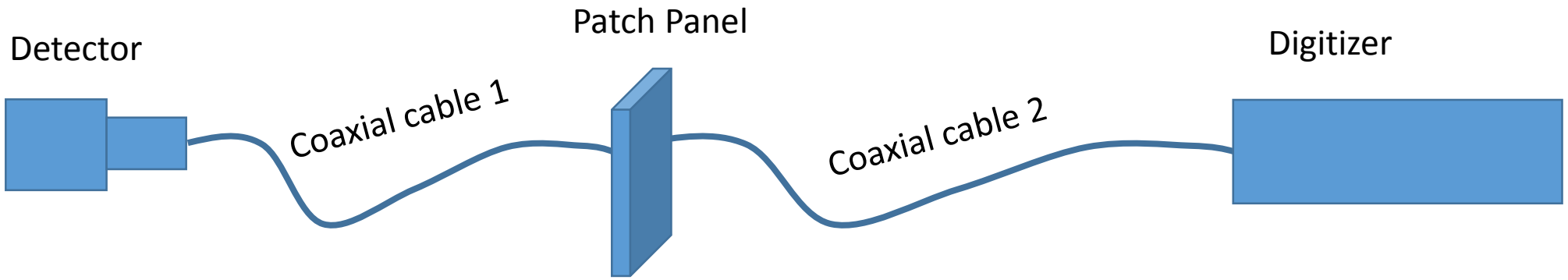

The first obvious things to check with an oscilloscope:

a) inspect output signal "directly" from detector
b) inspect output signal after Patch-Panel (PP)
c) inspect output PMT signal at Digitizer input

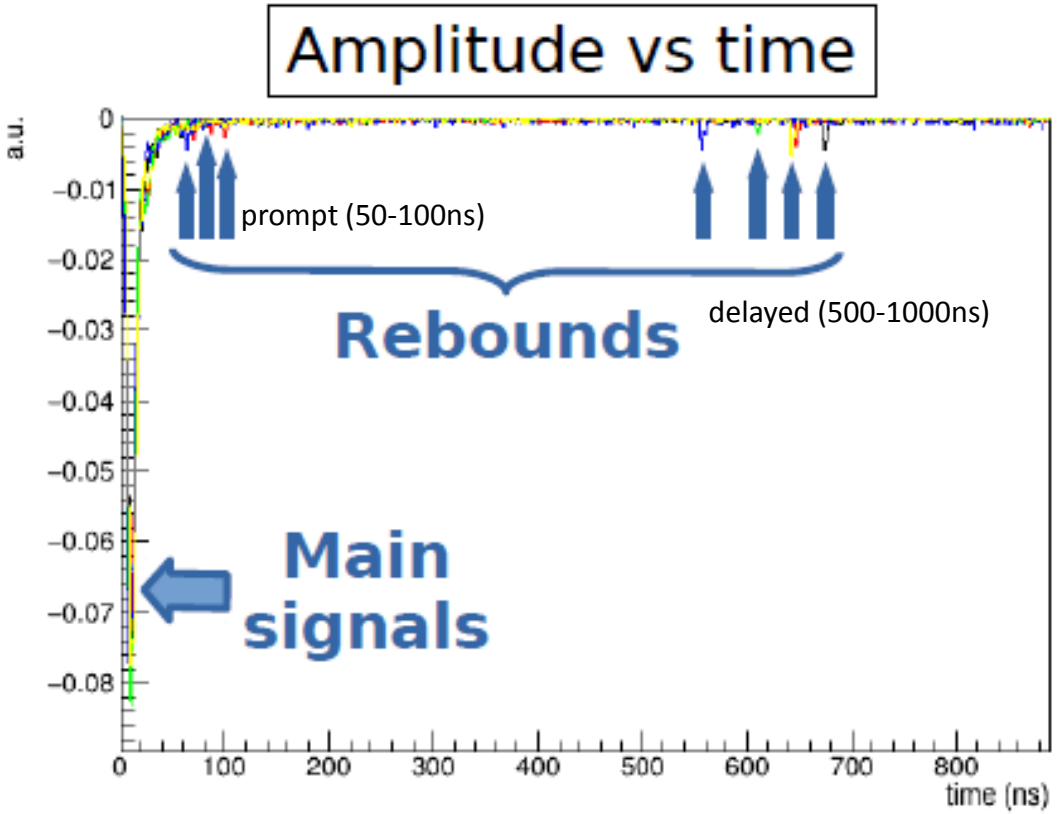

Prompt rebounds: ringing from VD?

5.1.5 Countermeasures for fast response circuits

As shown in Figure 5-12, inserting a lowpass filter comprised of R_1 and C_1 into the high-voltage supply line is also effective in reducing noise pickup from the high-voltage line. The resistor R_1 is usually several tens of kilohms, and a ceramic capacitor of 0.001 to 0.05 microfarads which withstands high voltage is frequently used as C_1.

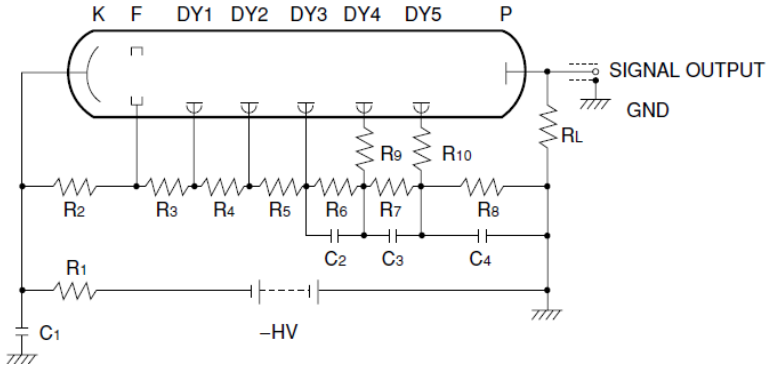

In applications handling a fast pulsed output with a rise time of less than 10 nanoseconds, inserting damping resistors R_{10} into the last dynode as shown in Figure 5-11 and if necessary, R_9 into the next to last dynode can reduce ringing in the output waveform. As damping resistors, noninduction type resistors of about 10 to 200 ohms are used. If these values are too large, the time response will deteriorate. Minimum possible values should be selected in the necessary range while observing the actual output waveforms. Figure 5-13 shows typical waveforms as observed in a normal voltage-divider circuit with or without damping resistors. It is clear that use of the damping resistors effectively reduces ringing.

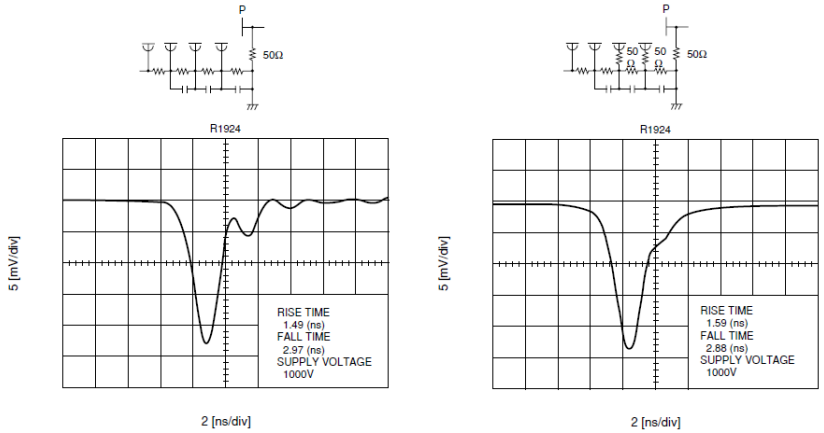

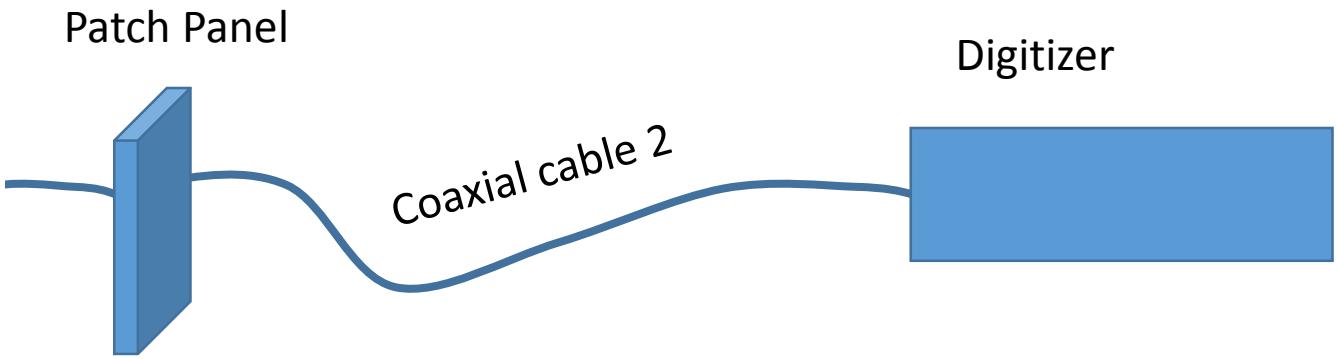

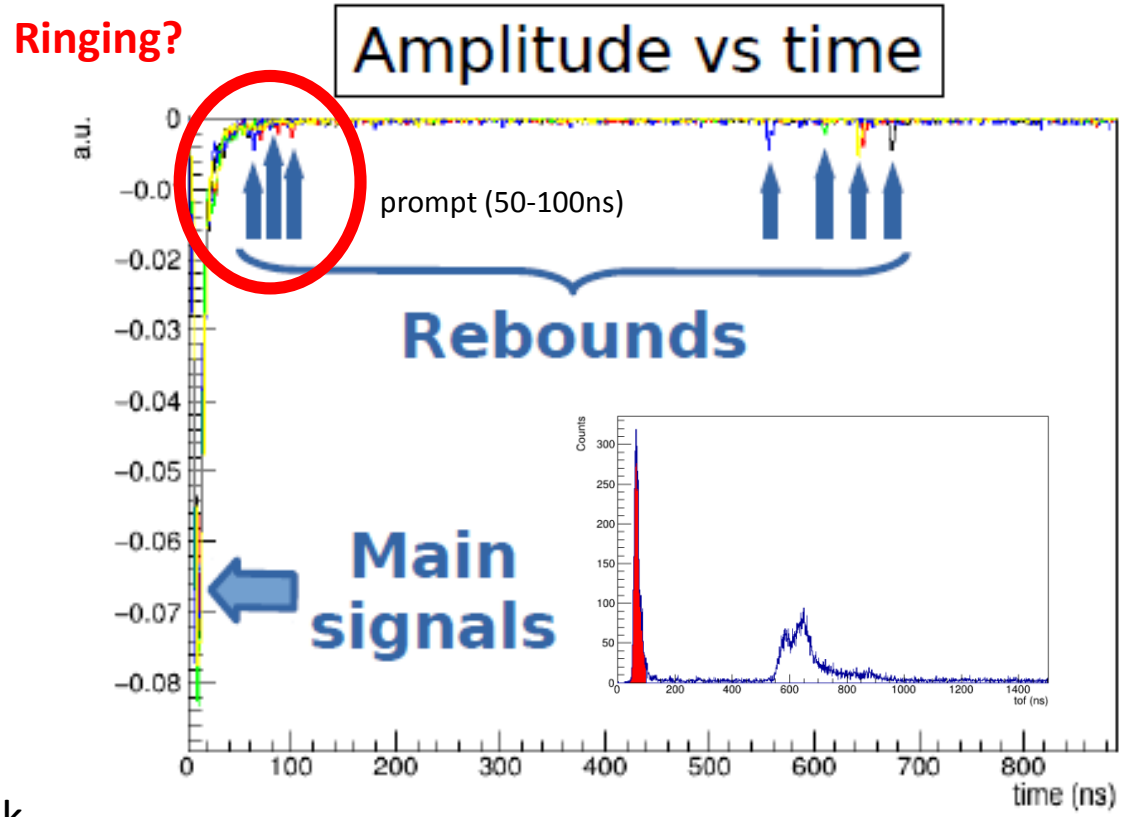

HAMAMATSU photomultiplier tubes Basics and Applications, Handbook

Prompt rebounds: impedance (Z) missmatch along the transmission lines?

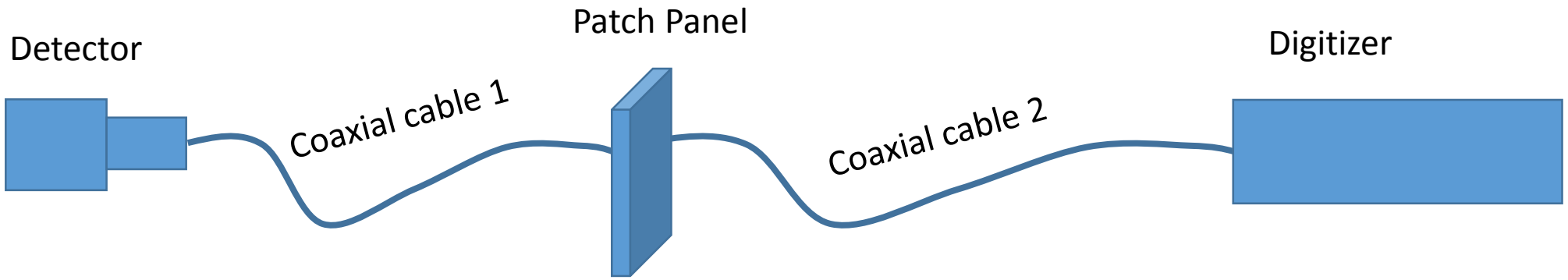

Impedance mismatch?
(just an option between many other hypothesis)

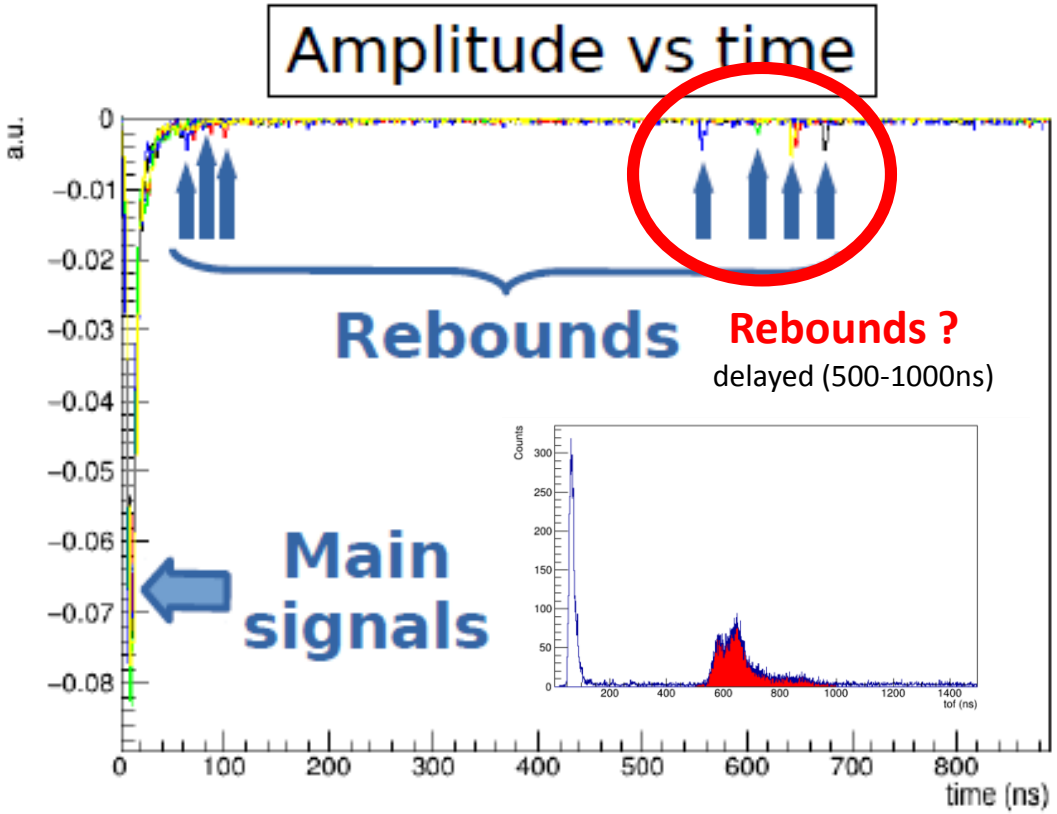

RF Simulation (LT-Spice) of our problem: a perfectly Z-matched set-up

The setup:

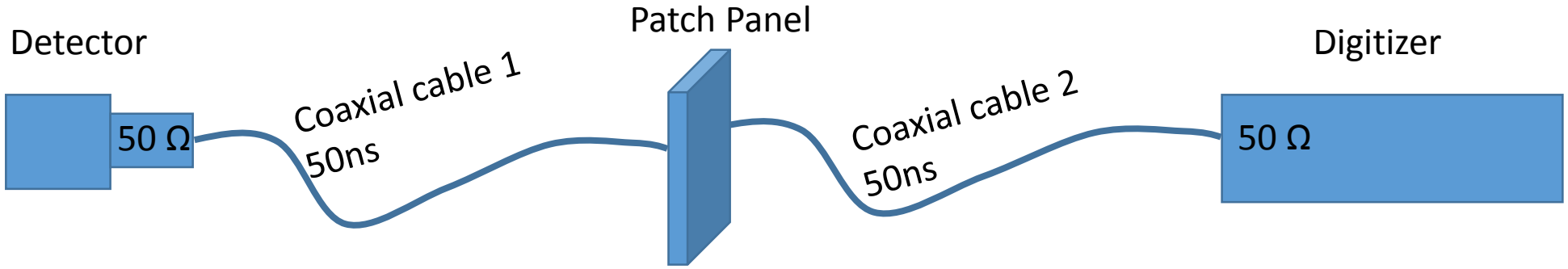

The model (ideal):

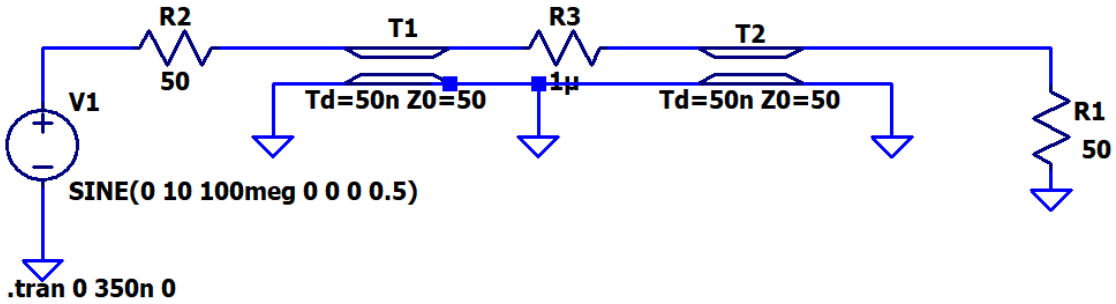

Simulation
Program with
Integrated
Circuit
Emphasis

LTspice®

ANALOG DEVICES
AHEAD OF WHAT'S POSSIBLE™

RF Simulation (LT-Spice) of our problem: a perfectly Z-matched set-up

The setup:

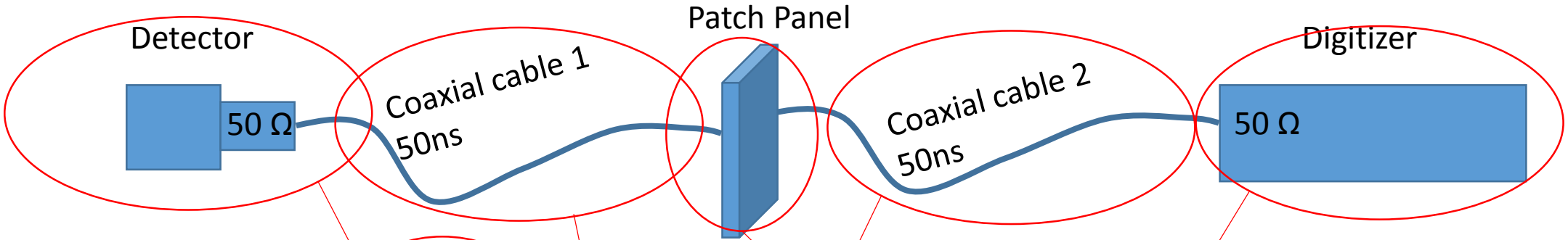

The model (ideal):

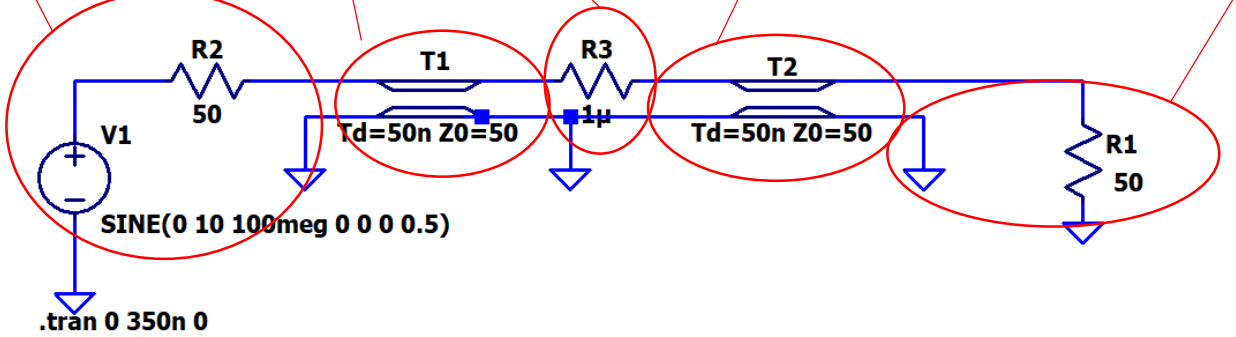

The result (ideal):

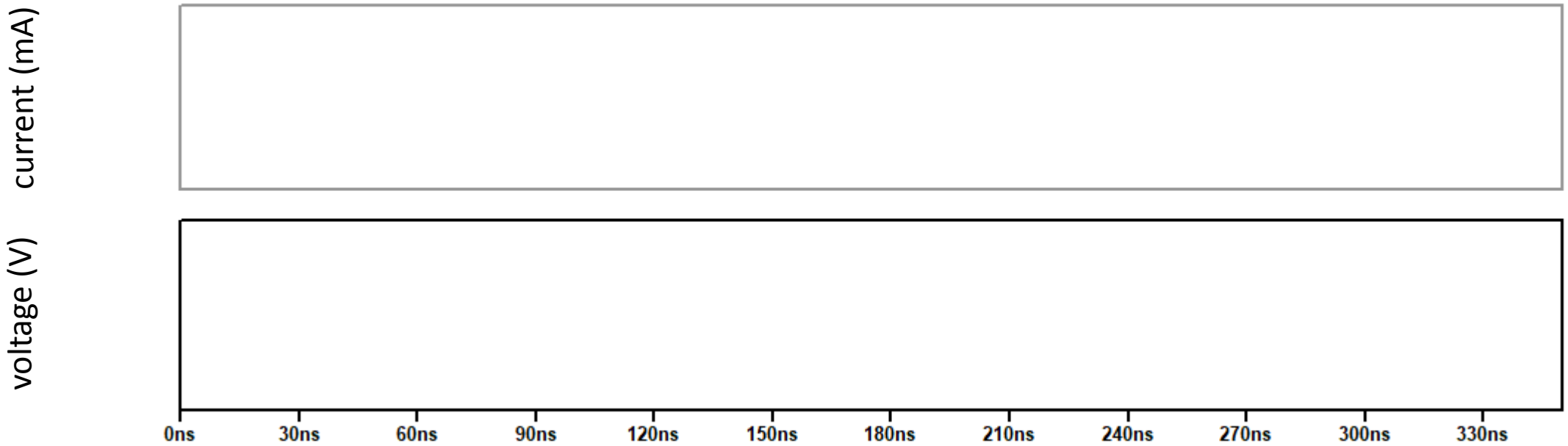

RF Simulation (LT-Spice) of our problem: a perfectly Z-matched set-up

The setup:

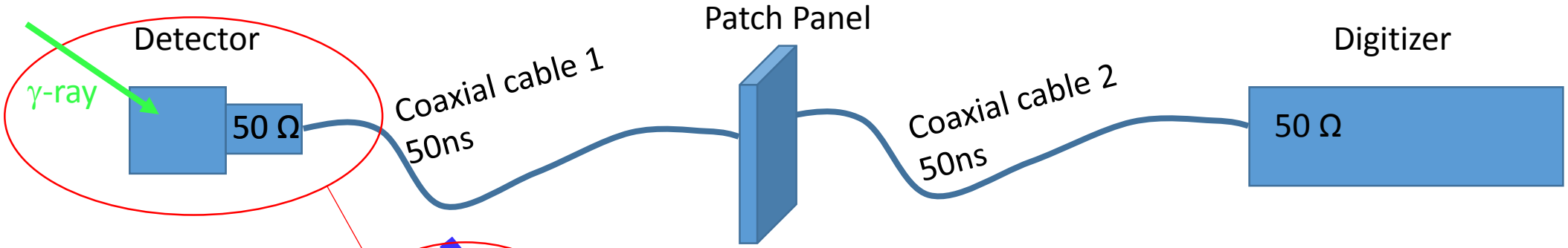

The model (ideal):

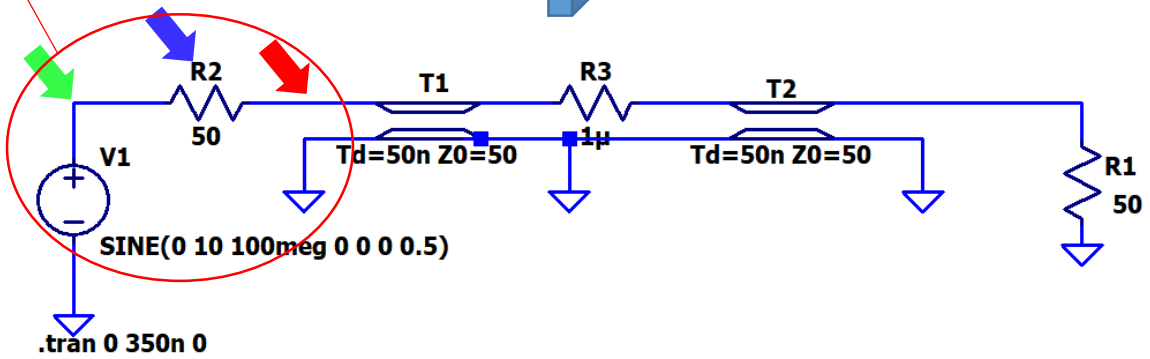

The result (ideal):

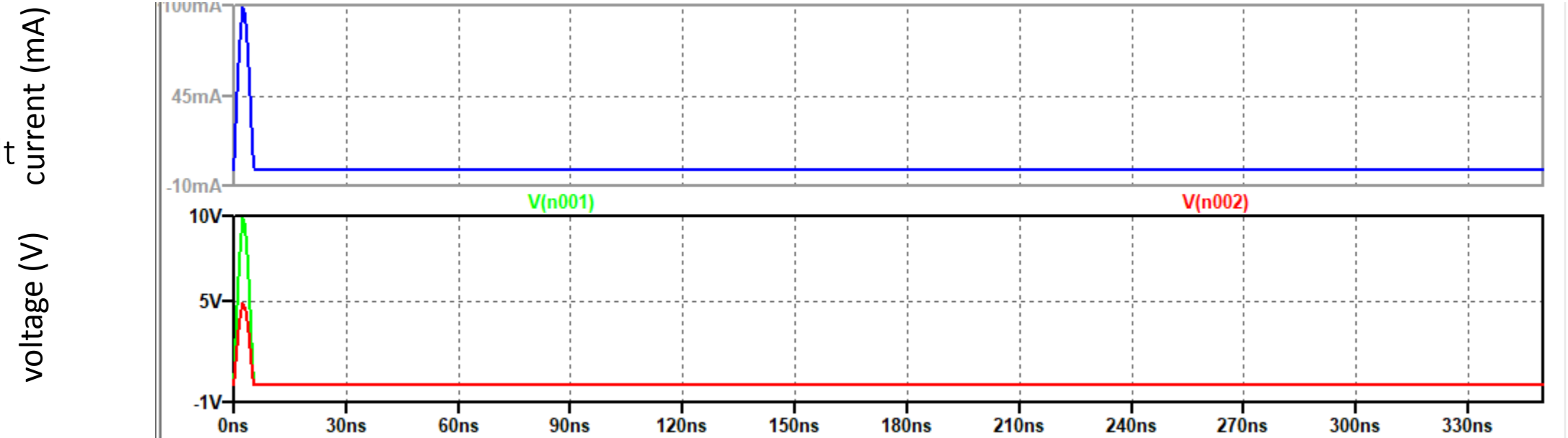

RF Simulation (LT-Spice) of our problem:

The setup:

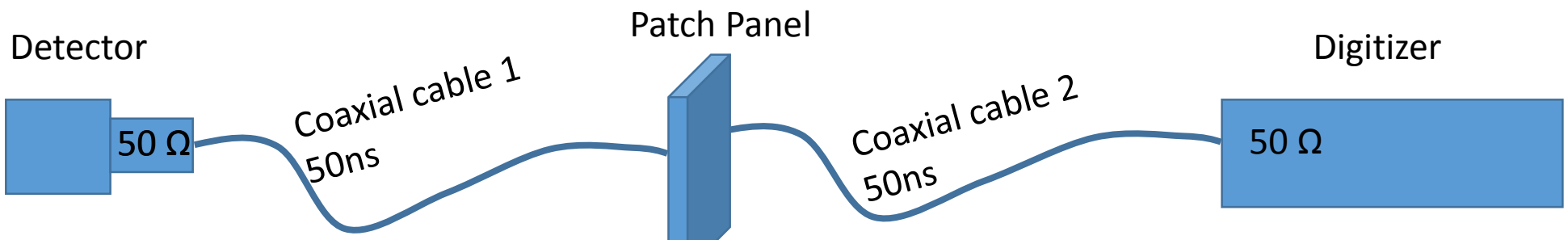

The model (ideal):

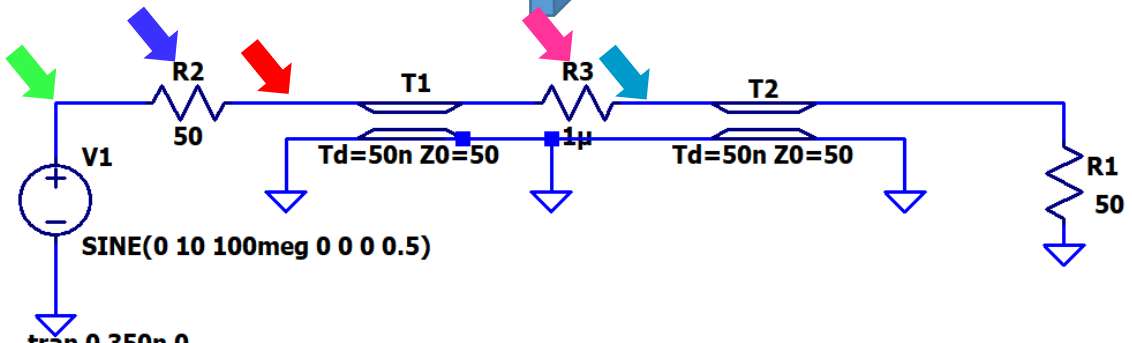

The result (ideal):

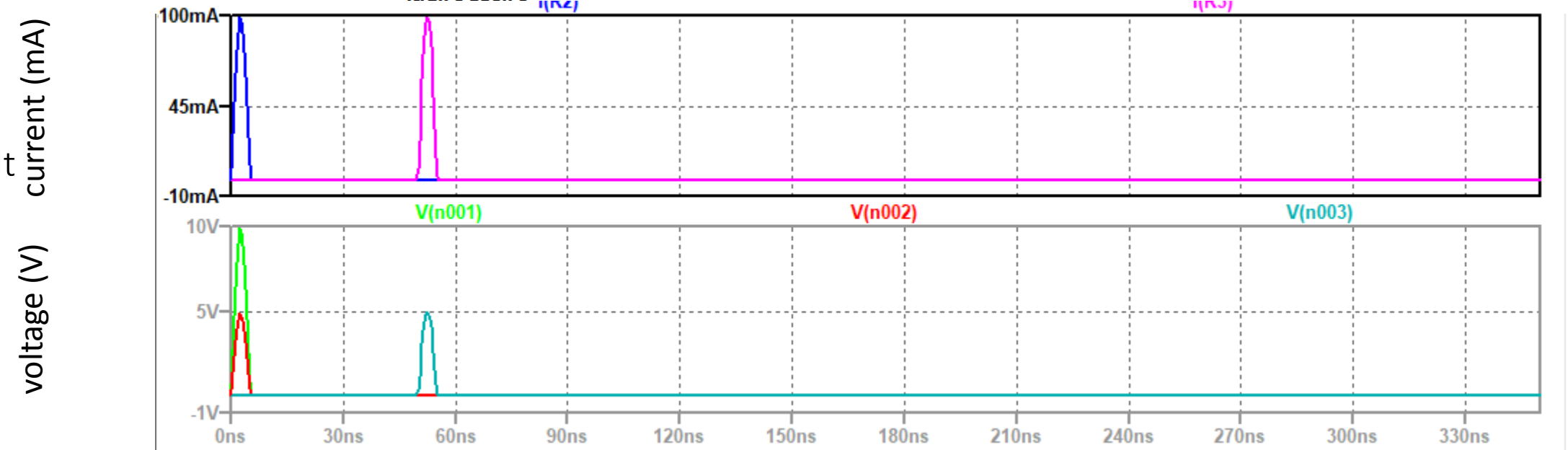

RF Simulation (LT-Spice) of our problem:

The setup:

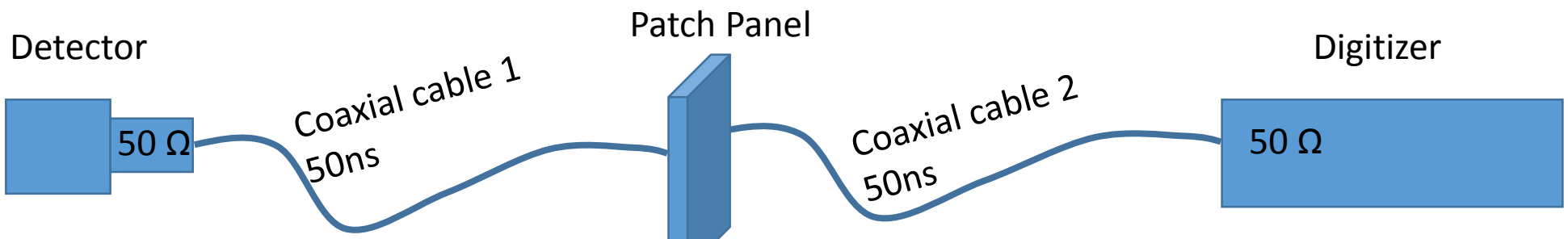

The model (ideal):

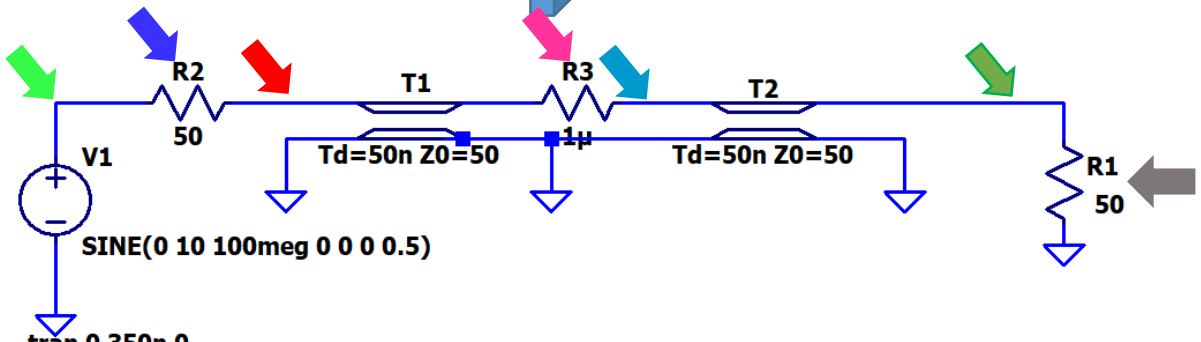

The result (ideal):

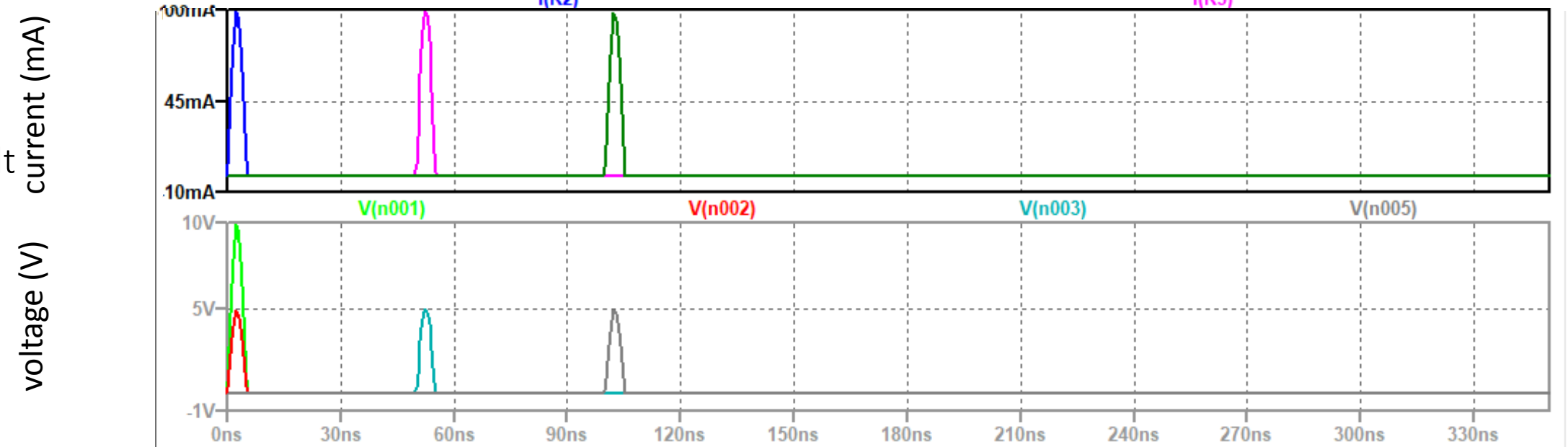

RF Simulation (LT-Spice) of our problem:

The setup:

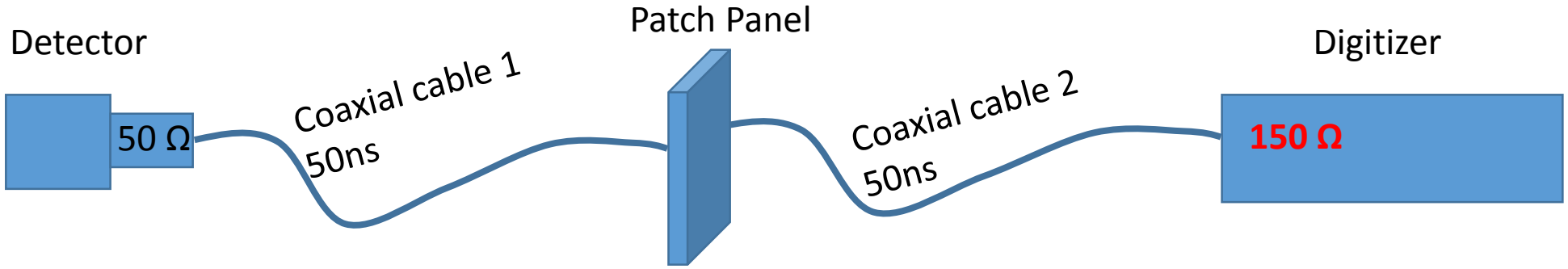

The model (ideal):

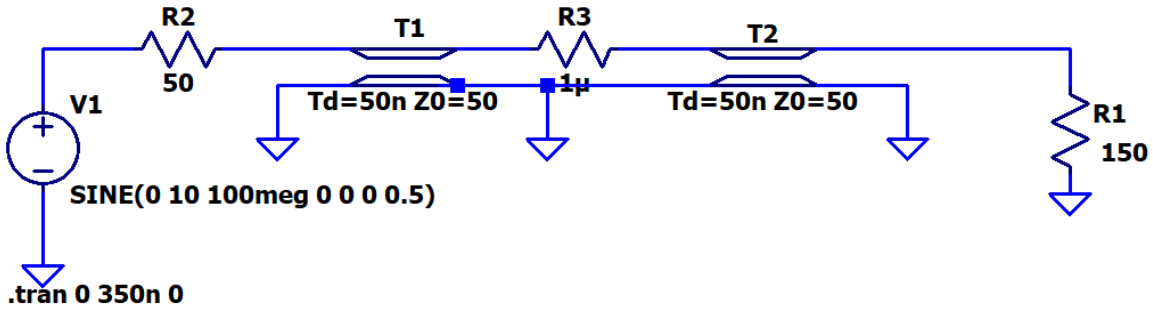

The result (ideal):

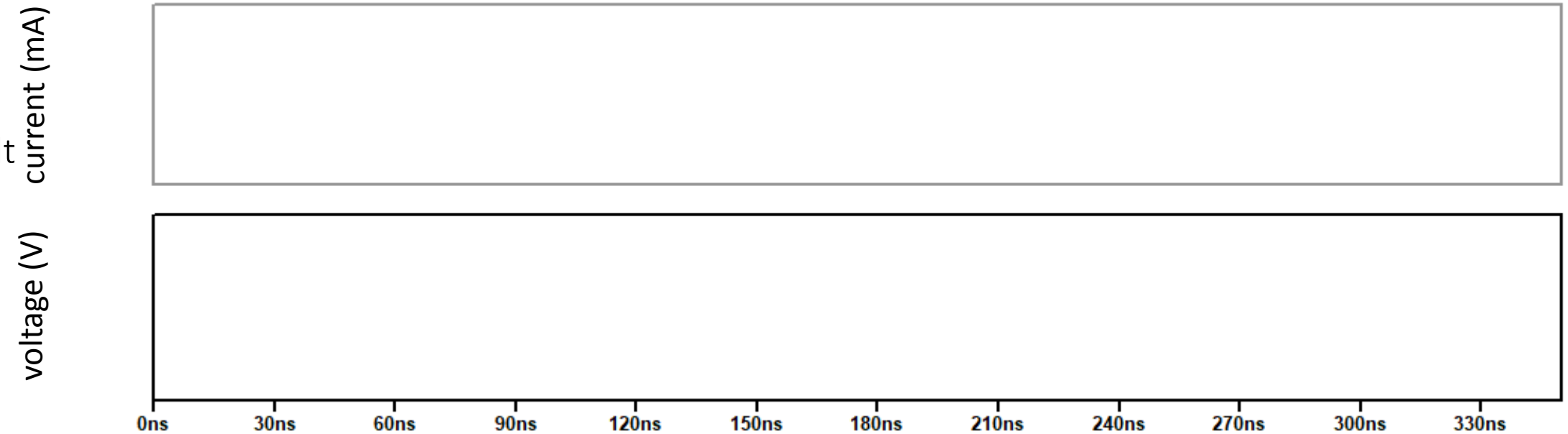

RF Simulation (LT-Spice) of our problem:

The setup:

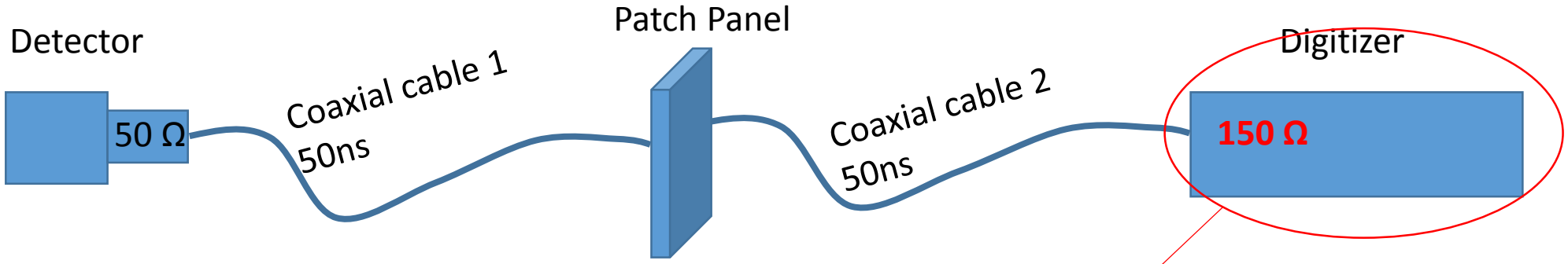

The model (ideal):

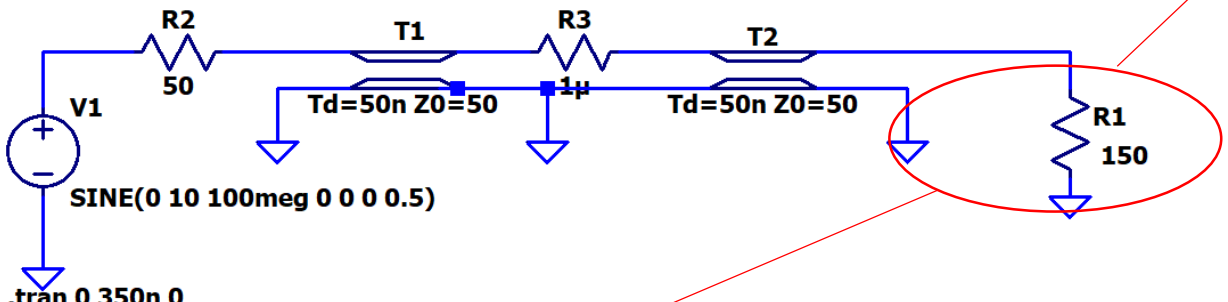

The result (ideal):

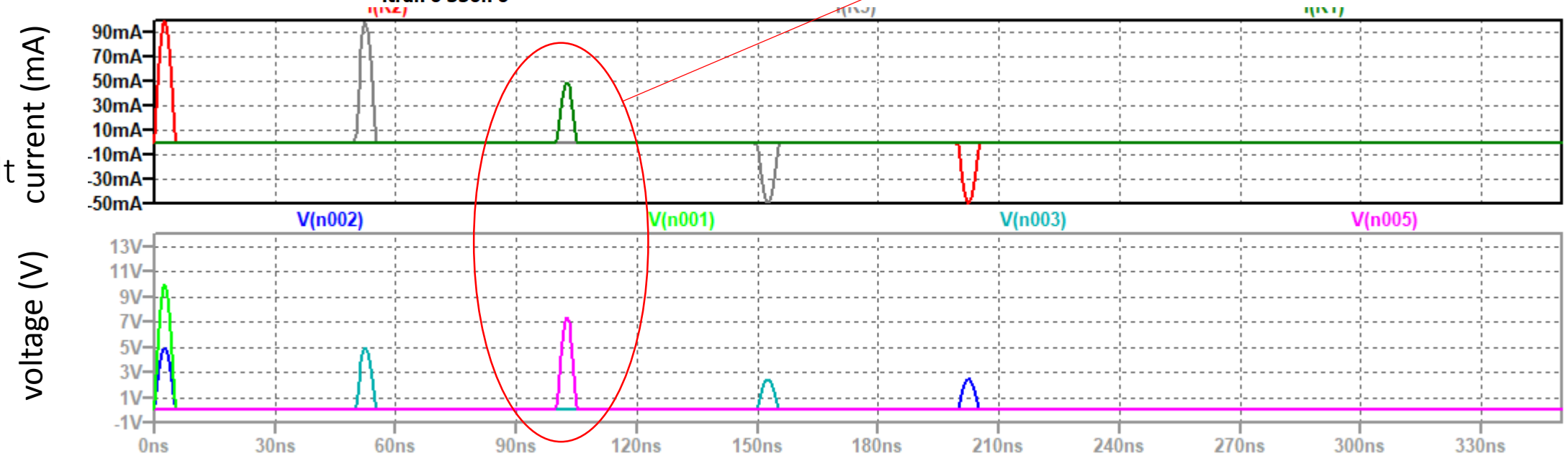

RF Simulation (LT-Spice) of our problem:

The setup:

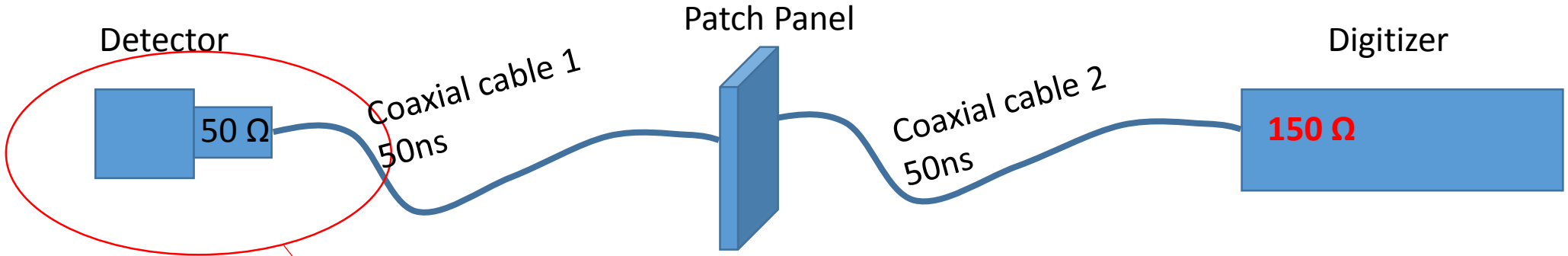

The model (ideal):

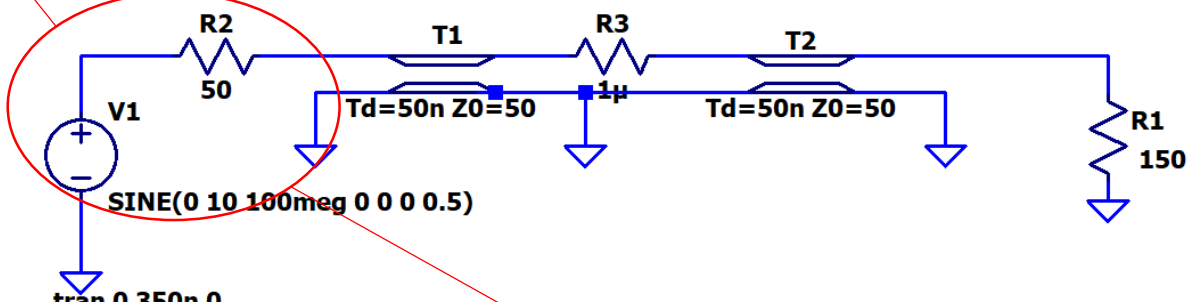

The result (ideal):

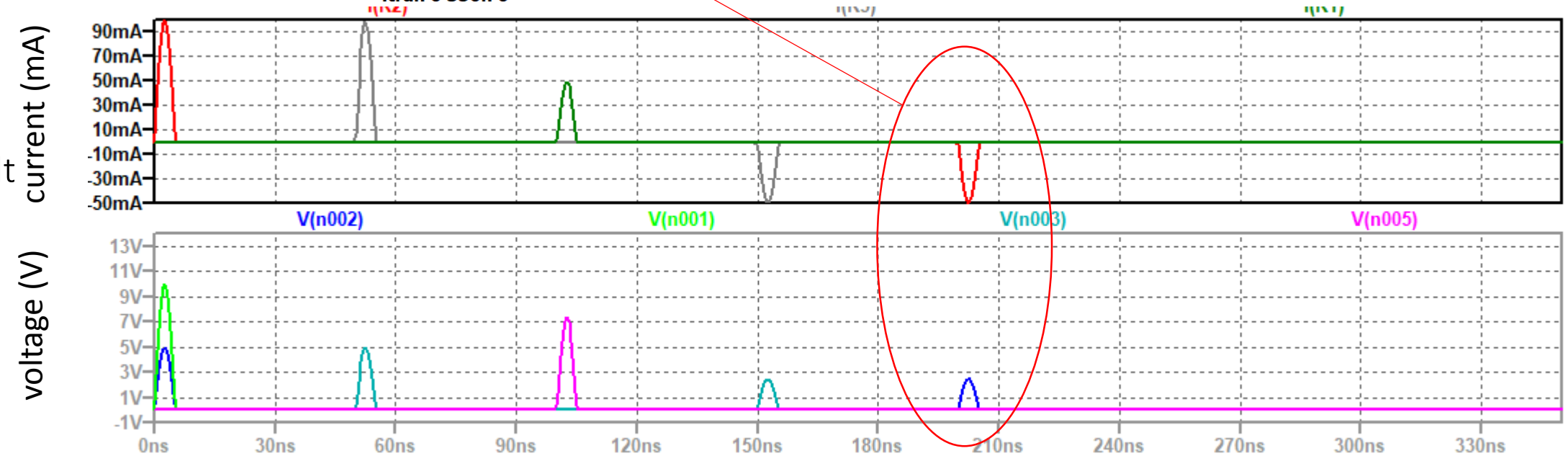

RF Simulation (LT-Spice) of our problem:

The setup:

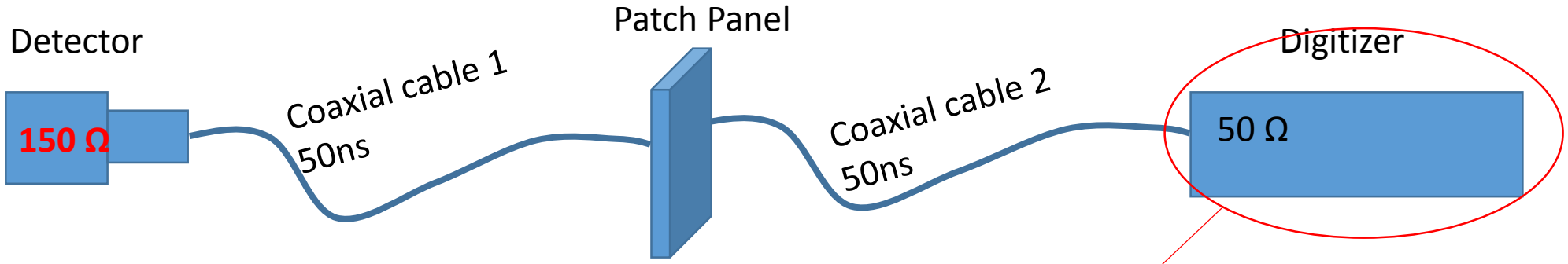

The model (ideal):

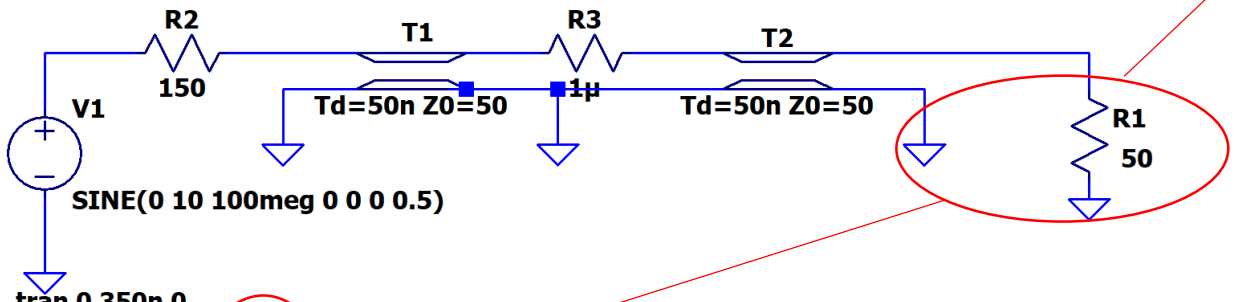

The result (ideal):

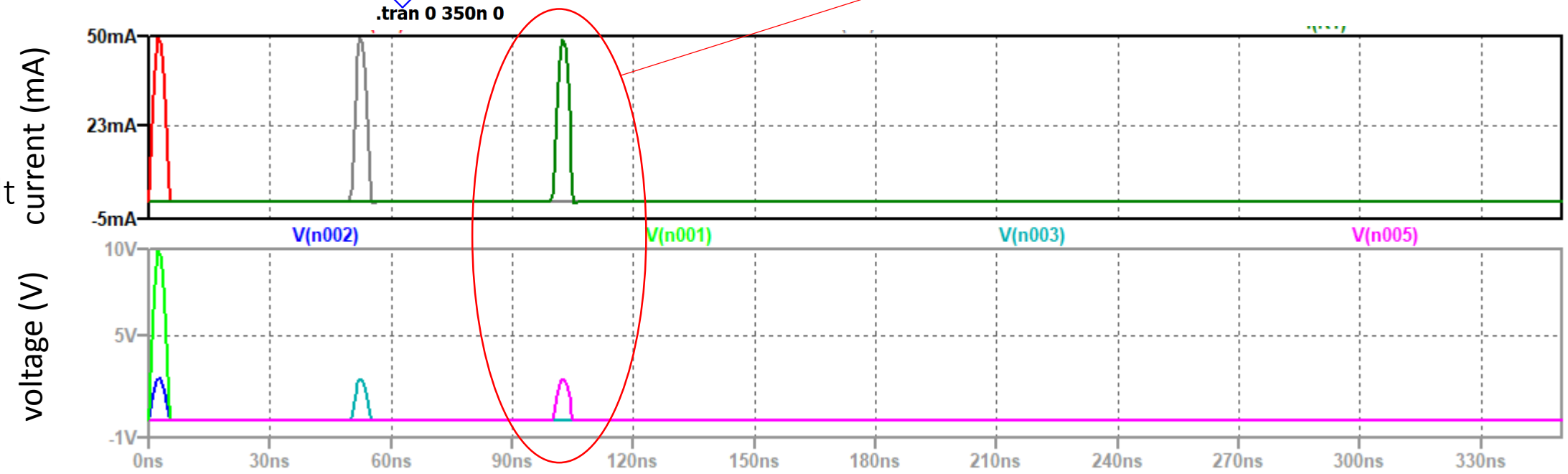

RF Simulation (LT-Spice) of our problem:

The setup:

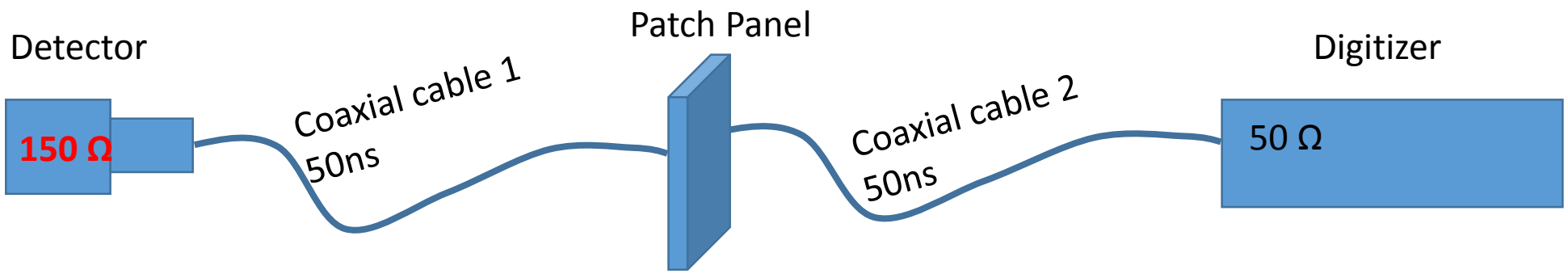

The model (ideal):

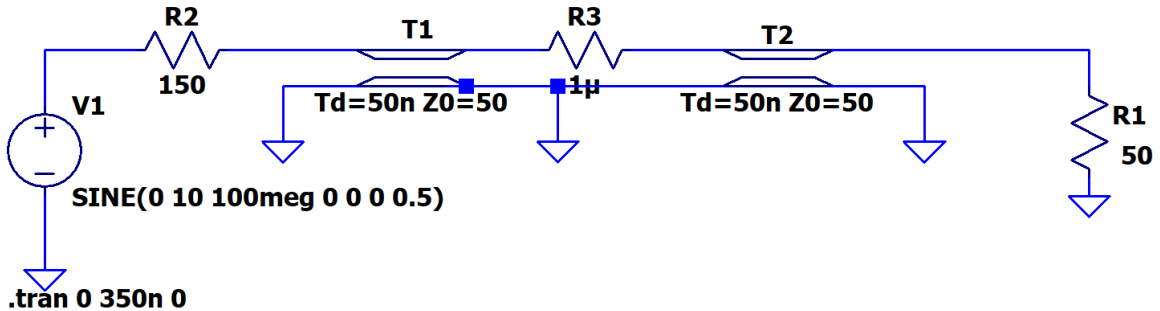

The result (ideal):

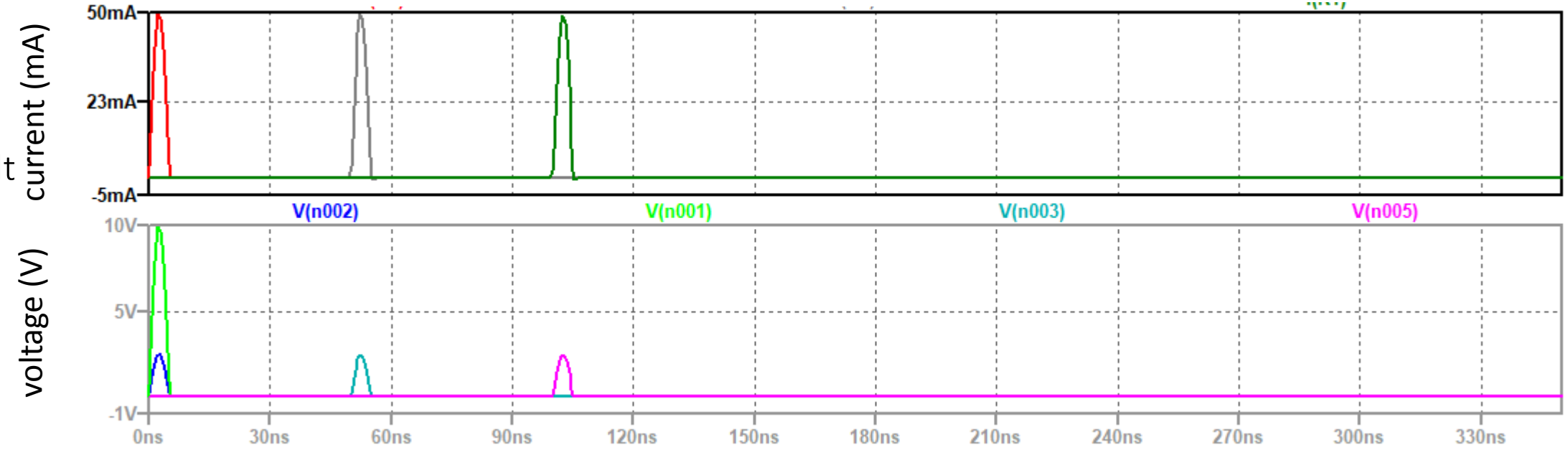

RF Simulation (LT-Spice) of our problem:

The setup:

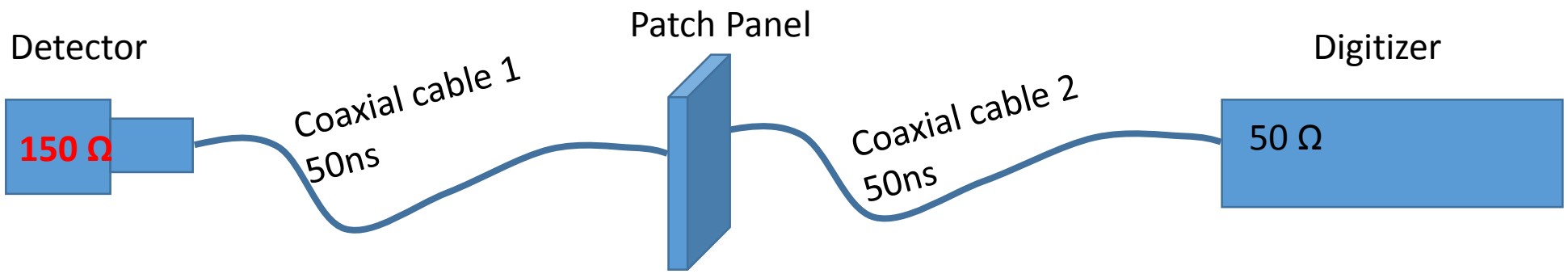

The model (ideal):

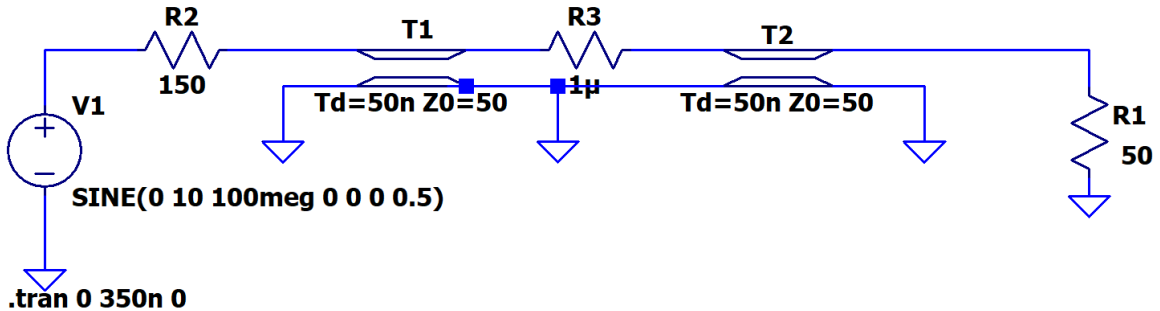

The result (ideal):

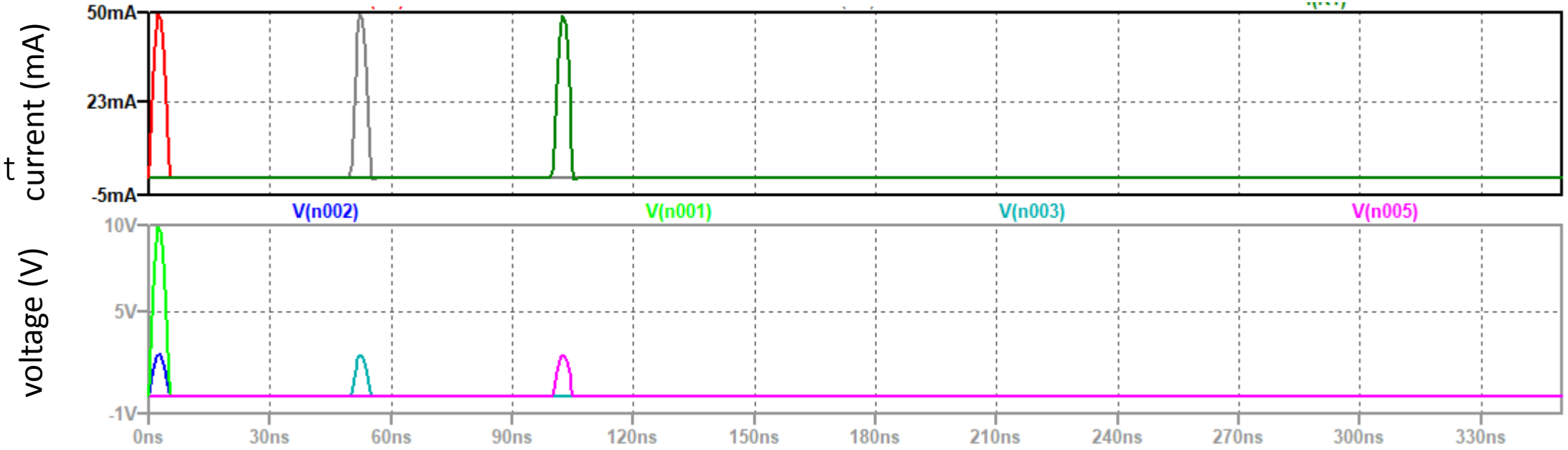

RF Simulation (LT-Spice) of our problem:

The setup:

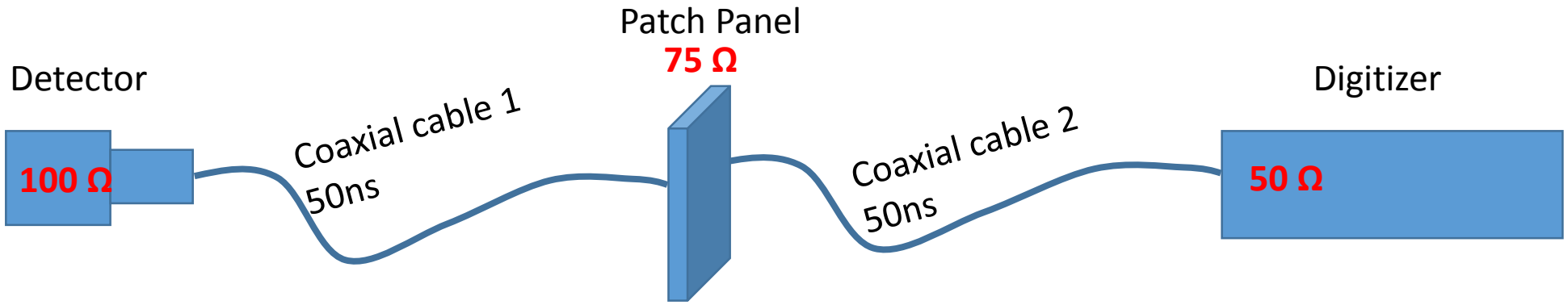

The model (ideal):

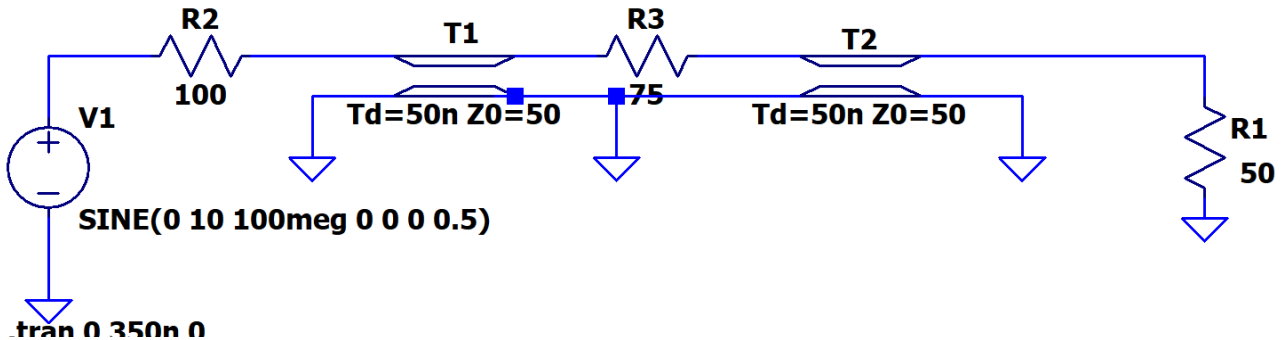

The result (ideal):

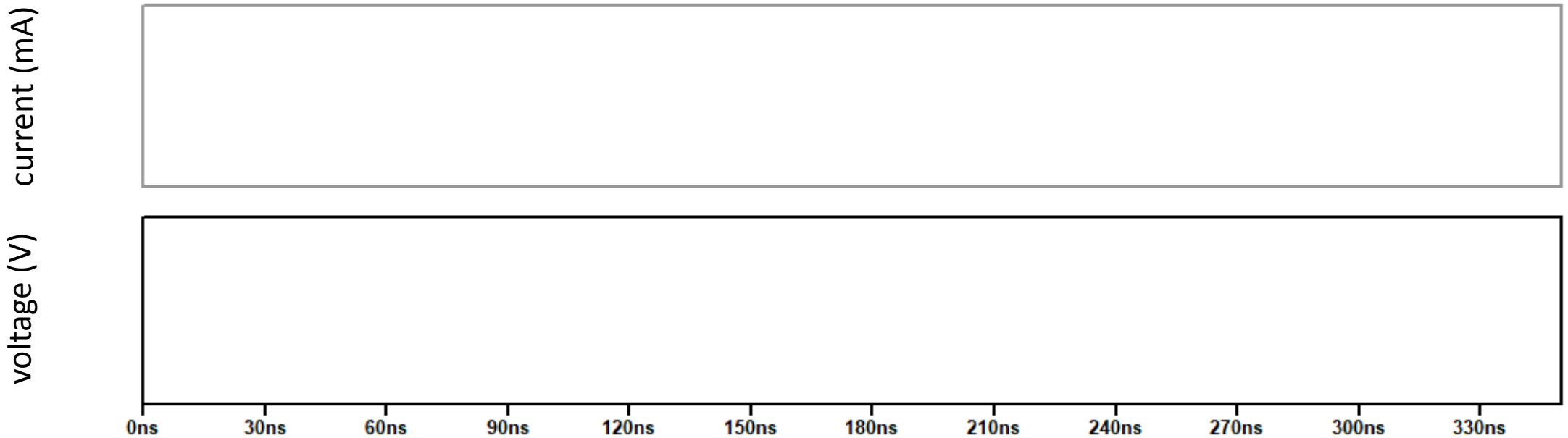

RF Simulation (LT-Spice) of our problem:

The setup:

The model (ideal):

The result (ideal):

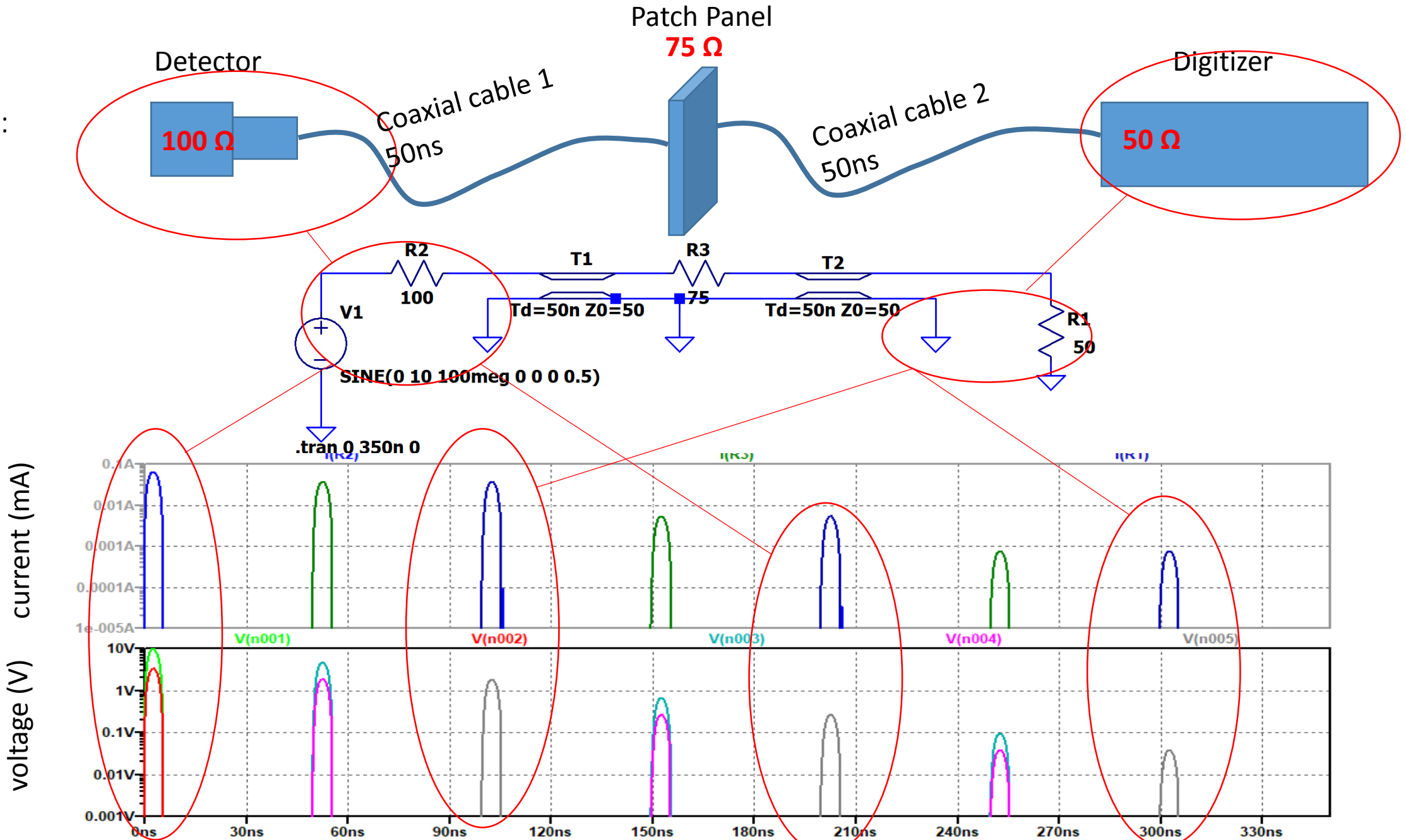

If it is a poor Z-matching… measure impedances at detector, cables and digitizers…

A detector response (impulse) is actually a contribution of many frequencies (in the frequency domain):

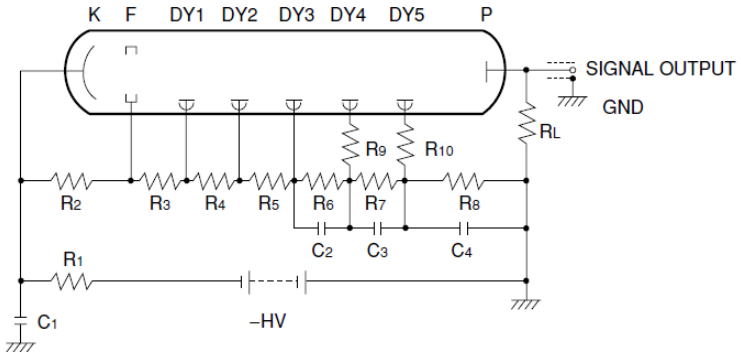

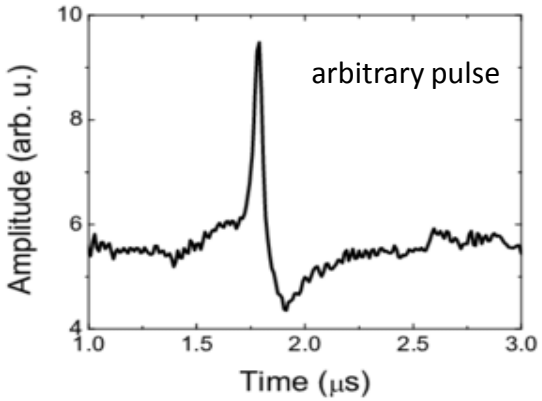

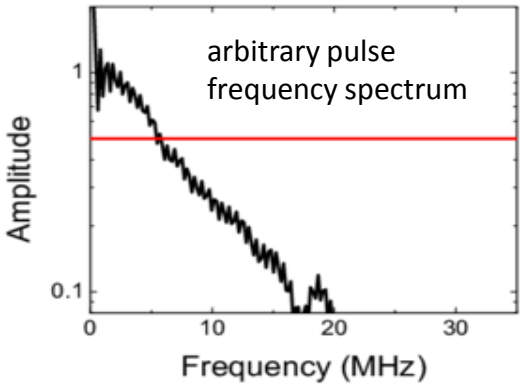

So we need to inspect IMPEDANCE as a function of FREQUENCY, across the full bandwith of the sampling digitizer.

DC-World:

=

Z_{DC}=100kΩ

RF-World:

=

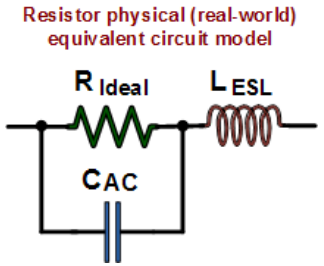

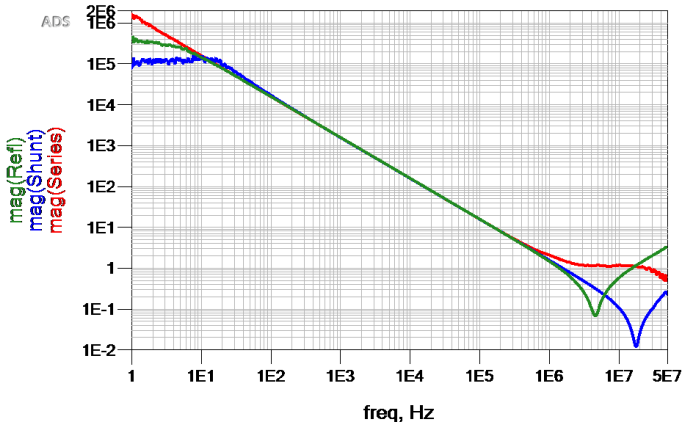

Impedance Z measurement across full bandwidth (0-500MHz) using a Vector-Network-Analyzer (VNA)

A VNA produces a RF signal (a1) and measures the reflected wave (b1). A frequency sweep is made to cover the full range:

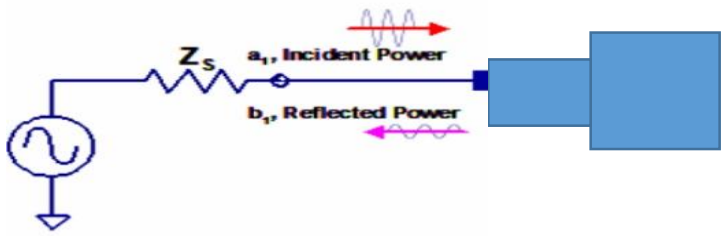

Detector
Z_L =? ohm

$$\Gamma = S_{11}(f) = \frac{b_1}{a_1} = \frac{Z_L(f) - Z_S(f)}{Z_L(f) + Z_S(f)}$$

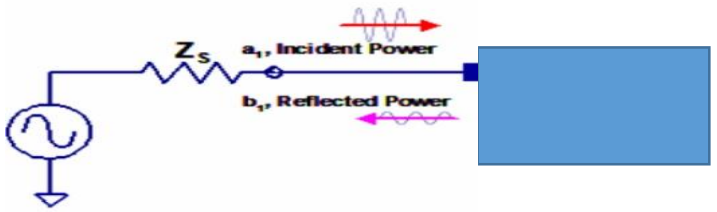

Digitizer
Z_L =? ohm

Scattering coefficients measured with a VNA (reflection coefficient S11):

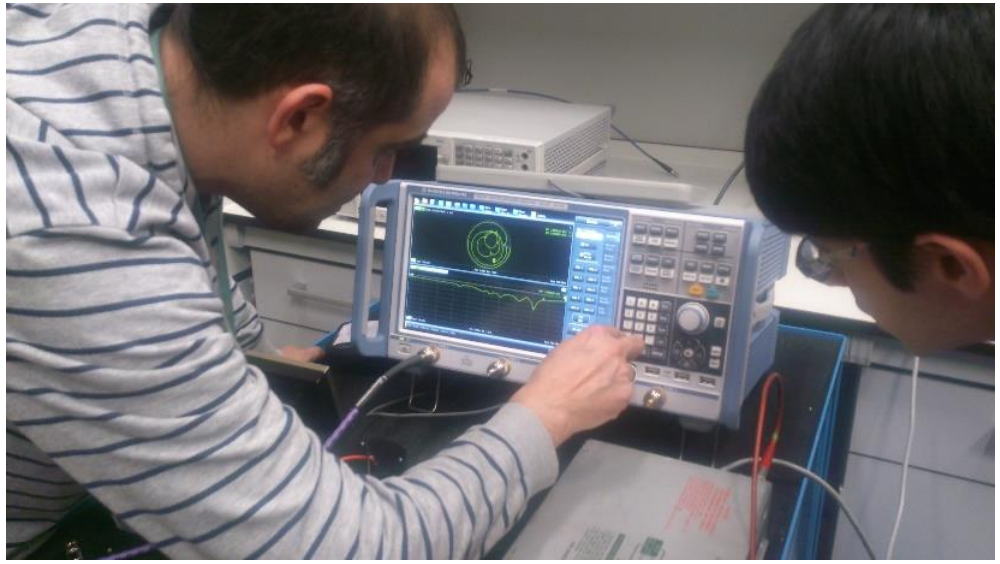

Impedance Z measurement using an arbitrary PMT+VD (just one example):

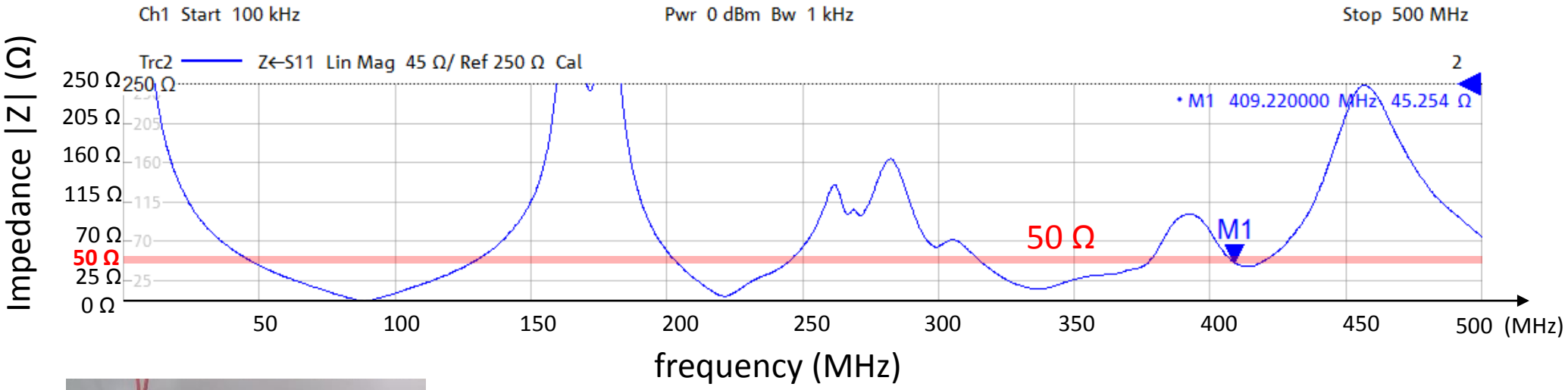

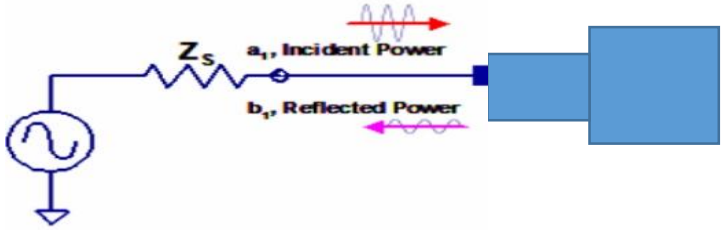

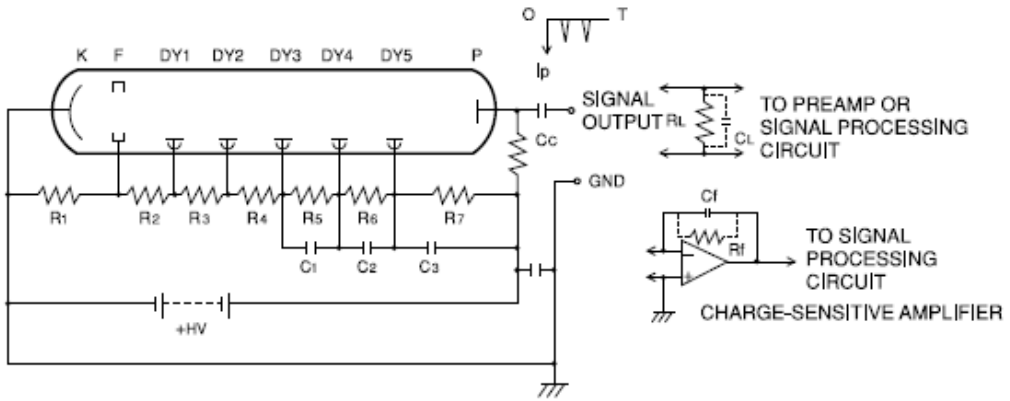

Impedance Z measurement using an arbitrary PMT+VD (just one example):

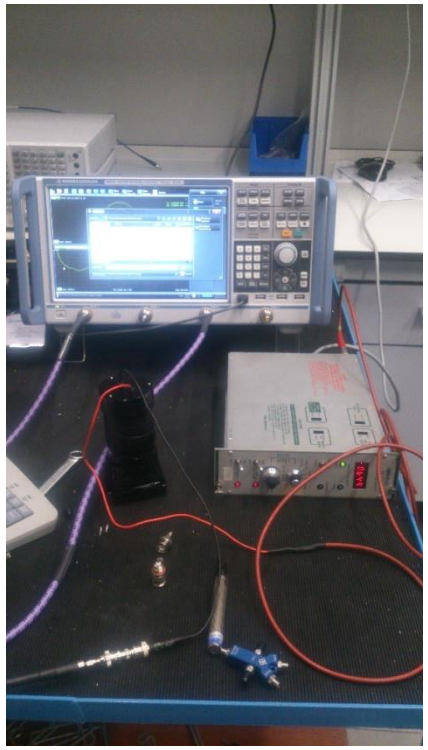

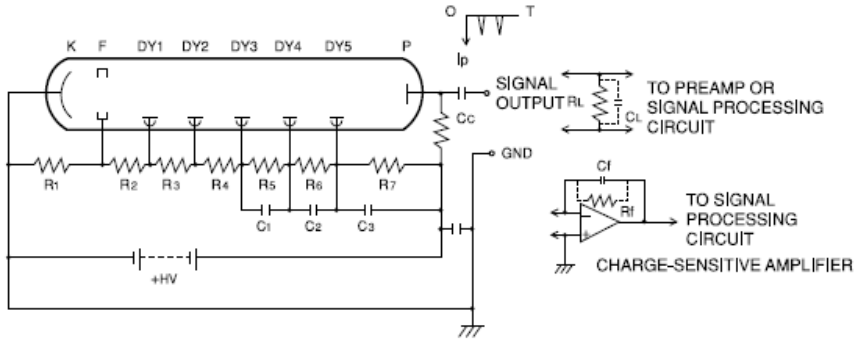

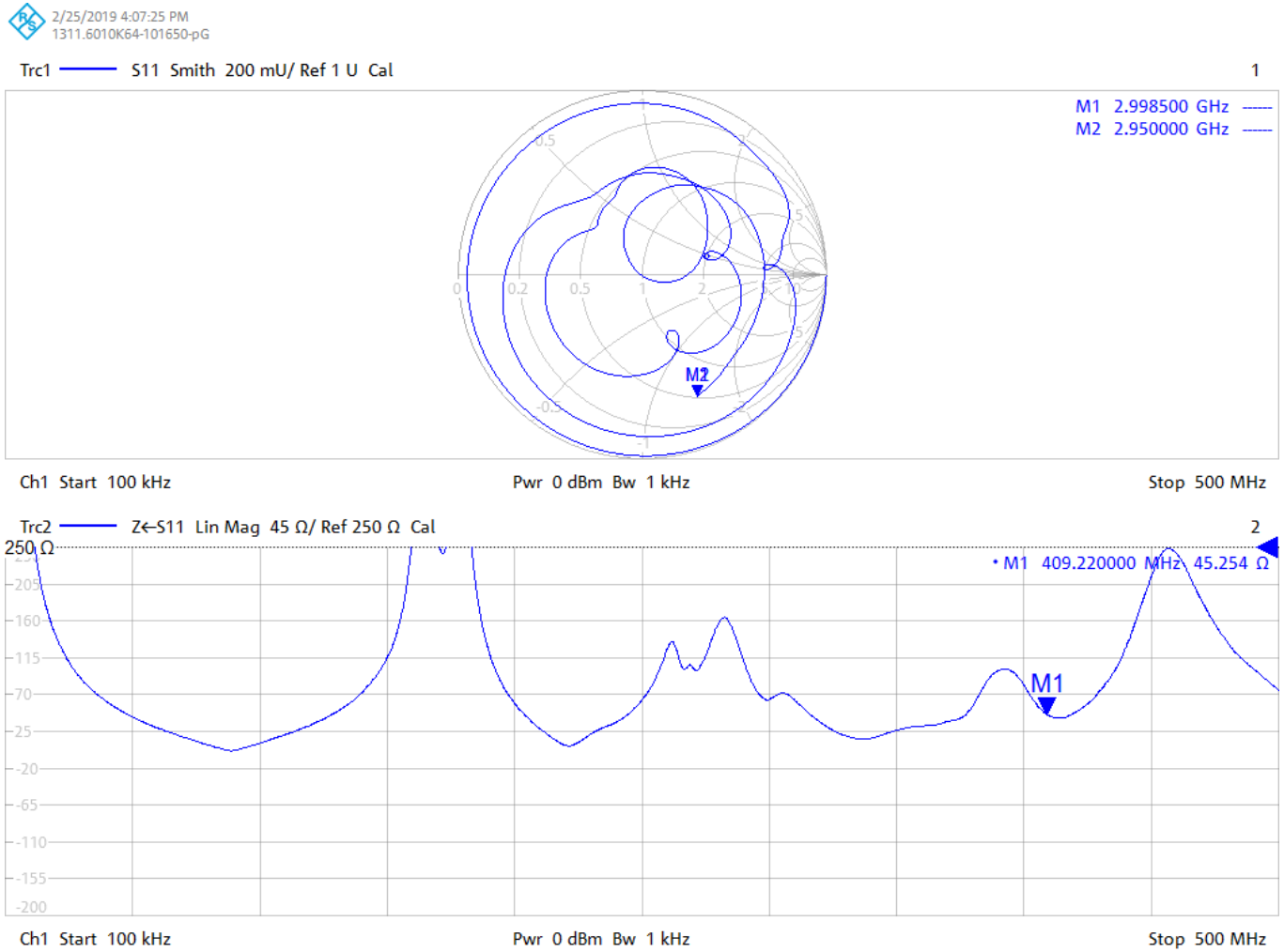

What says Hamamatsu-san about this?

5.3.4 Output circuit for a fast response photomultiplier tube

For the detection of light pulses with fast rise and fall times, a coaxial cable with 50-ohm impedance is used to make connection between the photomultiplier tube and the subsequent circuits.

To transmit and receive the signal output waveform with good fidelity, the output end must be terminated in a pure resistance equal to the characteristic impedance of the coaxial cable as shown in Figure 5-35. This allows the impedance seen from the photomultiplier tube to remain constant, independent of the cable length, making it possible to reduce "ringing" which may be observed in the output waveform. However, when using an MCP-PMT for the detection of ultra-fast phenomena, if the cable length is made unnecessarily long, distortion may occur in signal waveforms due to a signal loss in the coaxial cable.

If a proper impedance match is not provided at the output end, the impedance seen from the photomultiplier tube varies with frequency, and further the impedance value is also affected by the coaxial cable length, and as a result, ringing appears in the output. Such a mismatch may be caused not only by the terminated resistance and the coaxial cable but also by the connectors or the termination method of the coaxial cable. Thus, sufficient care must be taken to select a proper connector and also to avoid creating impedance discontinuity when connecting the coaxial cable to the photomultiplier tube or the connector.

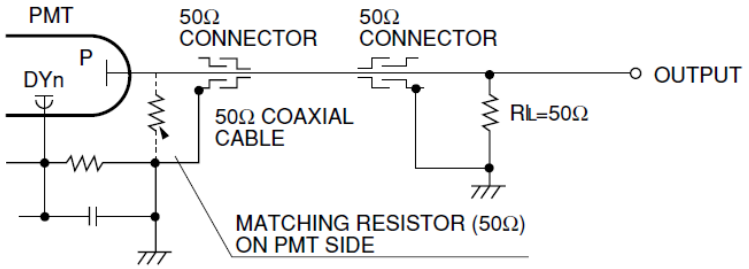

Transmission line impedance equation:

$$Z_{in} = Z_0 \frac{Z_L + j Z_0 \tan \beta \ell}{Z_0 + j Z_L \tan \beta \ell} \qquad \lambda = \frac{2\pi}{\beta}$$

HAMAMATSU photomultiplier tubes Basics and Applications, Handbook

Special cases of lossless terminated lines:

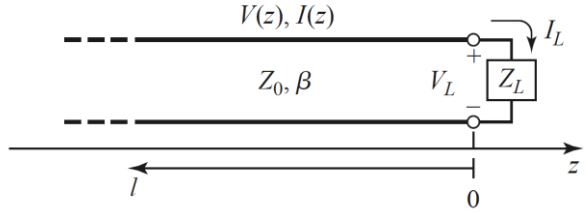

$$V(z) = V_o^+ e^{-j\beta z} + V_o^- e^{j\beta z} \qquad V(z) = V_o^+ \left(e^{-j\beta z} + \Gamma e^{j\beta z}\right),$$

$$I(z) = \frac{V_o^+}{Z_0} e^{-j\beta z} - \frac{V_o^-}{Z_0} e^{j\beta z} \qquad I(z) = \frac{V_o^+}{Z_0}\left(e^{-j\beta z} - \Gamma e^{j\beta z}\right).$$

Short circuit (Z_L=0 → Γ=-1):

$$V(z) = V_o^+ \left(e^{-j\beta z} - e^{j\beta z}\right) = -2j V_o^+ \sin \beta z.$$

$$I(z) = \frac{V_o^+}{Z_0}\left(e^{-j\beta z} + e^{j\beta z}\right) = \frac{2V_o^+}{Z_0} \cos \beta z.$$

$$Z_{in} = j Z_0 \tan \beta \ell$$

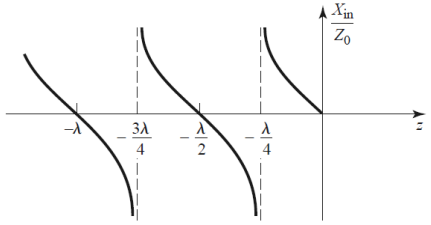

Open circuit (Z_L=∞ → Γ=1):

$$V(z) = V_o^+ \left(e^{-j\beta z} + e^{j\beta z}\right) = 2V_o^+ \cos \beta z,$$

$$I(z) = \frac{V_o^+}{Z_0}\left(e^{-j\beta z} - e^{j\beta z}\right) = \frac{-2j V_o^+}{Z_0} \sin \beta z$$

$$Z_{in} = -j Z_0 \cot \beta \ell$$

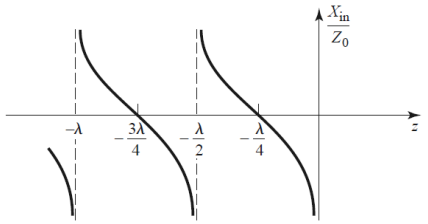

Microwave Engineering, David M. Pozar, 4th Ed. Wiley (Chapter 2.3)

Proposed tests with C6D6: Summary

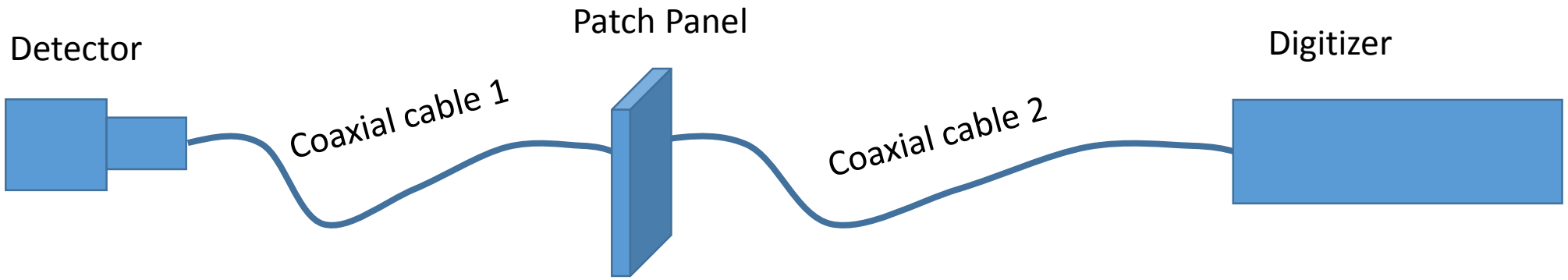

What?	When?	Setup	Where?
Response	LS2 2019-2020	Oscilloscope	Detector, PatchPanel, at Digitizer input
Impedance	LS2 2019-2020	VNA	Detector, PatchPanel, at Digitizer input
Voltage Divider	LS2 2019-2020		PMT